QRP T-R Switching

Cryptic letters are codes for Japanese/Chinese characters. English readers may skip them.

□$BJF9q@=$N:G6a$N□(BQRP□$B%H%i%s%7!<%P%-%C%H$N2sO)?
^$r8+$F$_$k$H!"C1=c$JAw!&o;~DJ$.$CQJ7KJC$F$$$F!"=*CJ$H□(B □$B%m!<%Q%9%U%#%k%?!<NDJ.a+$i□(BT-
R□$B%9%$%C%A$r7PM3$7$F
□$B?^□(B(a)□$B$K:G6aEv6I$,@_7W7F:nC?□(B30m QRP CW□$B%H%i%s%7!<%P$N□(BT-R□$B%9%$%C%AIt$N2sO)□(B □$B?
^rNcH7F<(7^$9!#□(B □$B%-!<$,$OJl$F$$$k;~$O□(B
D1□BH□(BD2□BO=gJ}8~$K%P%$%"%9$5$l$F$$$F!"%"%s%F%J$+$i□(B RX□BX?.9f$rDL2a$5$;$^$9!#0lJ}%-!
<$,@\$7$F$$$k;~$O!"□(BD1□$B$H□(BD2□$B$O5UJ}8~$K%P%$□(B
□$B%"%9$5lF$$$F!"Aw?.It$N6/NO$J□(BRF□$B=PNO$,□(BRX□BKN.lkNrKI$.$^$9!#□(B □$B3N2sO)KO%H%i%s%8%9%?!
<$d%m%8%C%/%2!<%H$JING=F0AG;R$O2?$b;Hol$F□(B □$B$$$^$;$s!#□(B

□$B:G=i$O□(BD1□BH□(BD2□BK□(BPIN □$B%@%$%*!<%I□(B 1SV128 □Br;HCF$$$?NG9,!"IaDL$N>.?.9f□(B
□$B%9%$%C%A%s%0MQ%7%j%3%s%@%$%*!<%I□(B1S1588□$BKBX(Fb@-G=KBg-$J:9$O$"$j$^□(B □$B$;$sG7$?!#□(B

□$BHf3S$N$?$a$K!"JF9q@=$NM-L>$J□(BQRP□$B%H%i%s%7!<%P%-%C%H$N□(BT-R□$B%9%$%C%A$N2sO)$+□(B
□Bi$$$/D+$r?^□(B(b)□$B$+$i□(B(e)□BK<(7^$9!#C"$7!"Aw?.It$N=*CJ$H%m!<%Q%9%U%#%k□(B □$B%?!
<$O>JN,$7F"j^$9!#□(B □$BIl$bC1=c$KG-$F$$$^$9!#□(B □$B3F?M$N9%$_$K1~$8$F$$$m$$$m

Many modern QRP transceiver kits have designs with full QSK using relatively simple T-R switching circuits. A common idea is that output of a TX final amplifier is always connected to an antenna through a low-pass filter, and that RX input is connected to the node between the TX output and the low-pass filter through a T-R switch.

Figure(a) shows an example circuit diagram used in a homebrew 30-meter QRP CW transceiver designed by myself recently. When the key is up, D1 and D2 are forward-biased letting signals pass from the antenna to RX. When the key is down, D1 and D2 are reversely-biased blocking strong RF power from TX to come into RX. It does not use any active components like transistors or logic gates.

In earlier design, PIN diodes 1SV128 were used for D1 and D2, but the performance did not change significantly by replacing them with common small signal switching silicon diodes 1S1588.(1N914 may be a possible US replacement for 1S1588)

For comparison, T-R switching diagrams of some famous QRP kits are also shown in figures(b)-(e). In these figures, TX final amplifiers and low-pass filters are not shown. These designs are also simple. One may try any of them to taste.

MINOWA, Makoto
7N3WVM
Last revised 1997-09-29.

(a) 7N3WVM

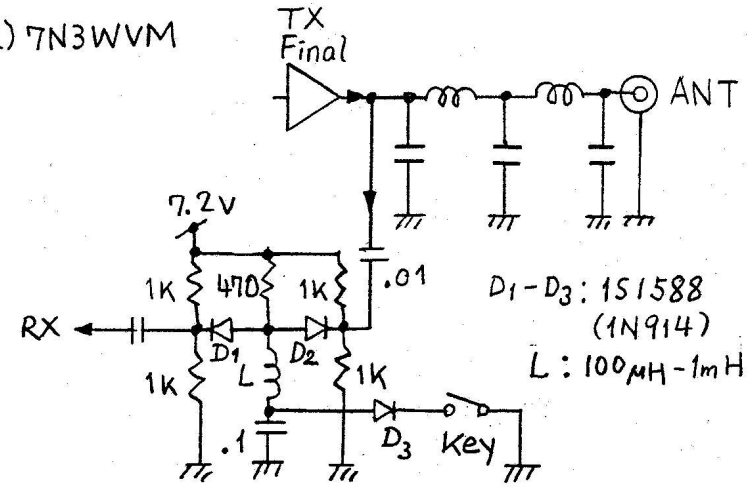

D1 - D3 : 1S1588
(1N914)
L : 100μH - 1mH

☹ 97-09-28

(b) NorCal 38S

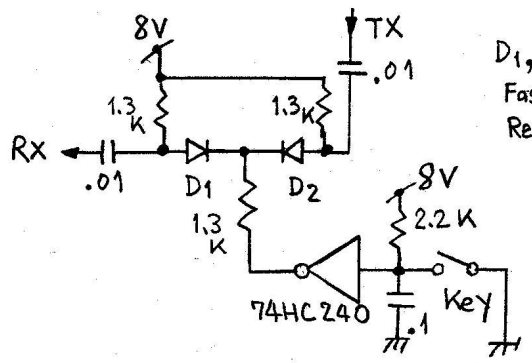

D1, D2 : 1N4007
Fast Recovery
Rectifier Diodes

(c) NorCal Sierra
NorCal 40A

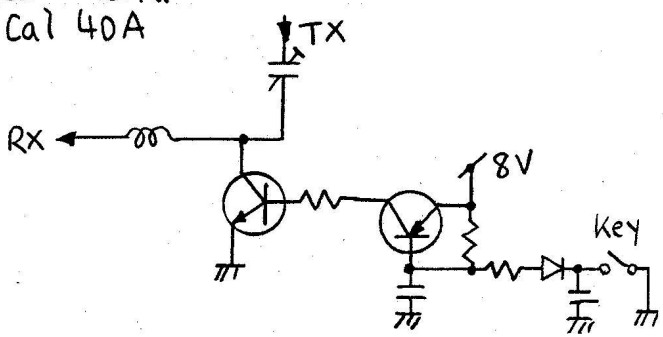

(d) NN1G 40-40

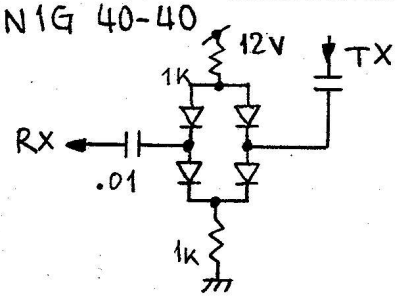

Diodes: 1N4148
or
1N914

(e) NN1G GM-20
NW 8020

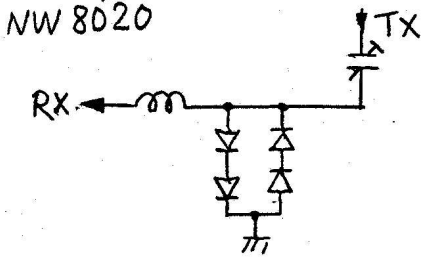

Diodes: 1N4148
or
equiv.